EarthWay Products, Inc.
P.O. Box 547
Bristol, IN 46507
Phone: 800-294-0671
www.earthway.com

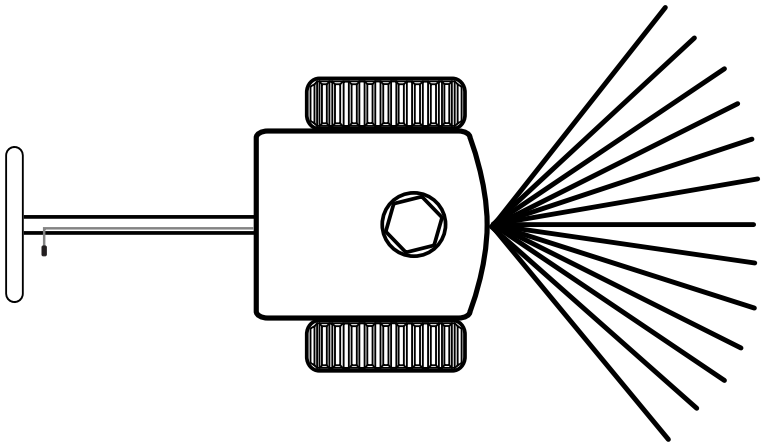
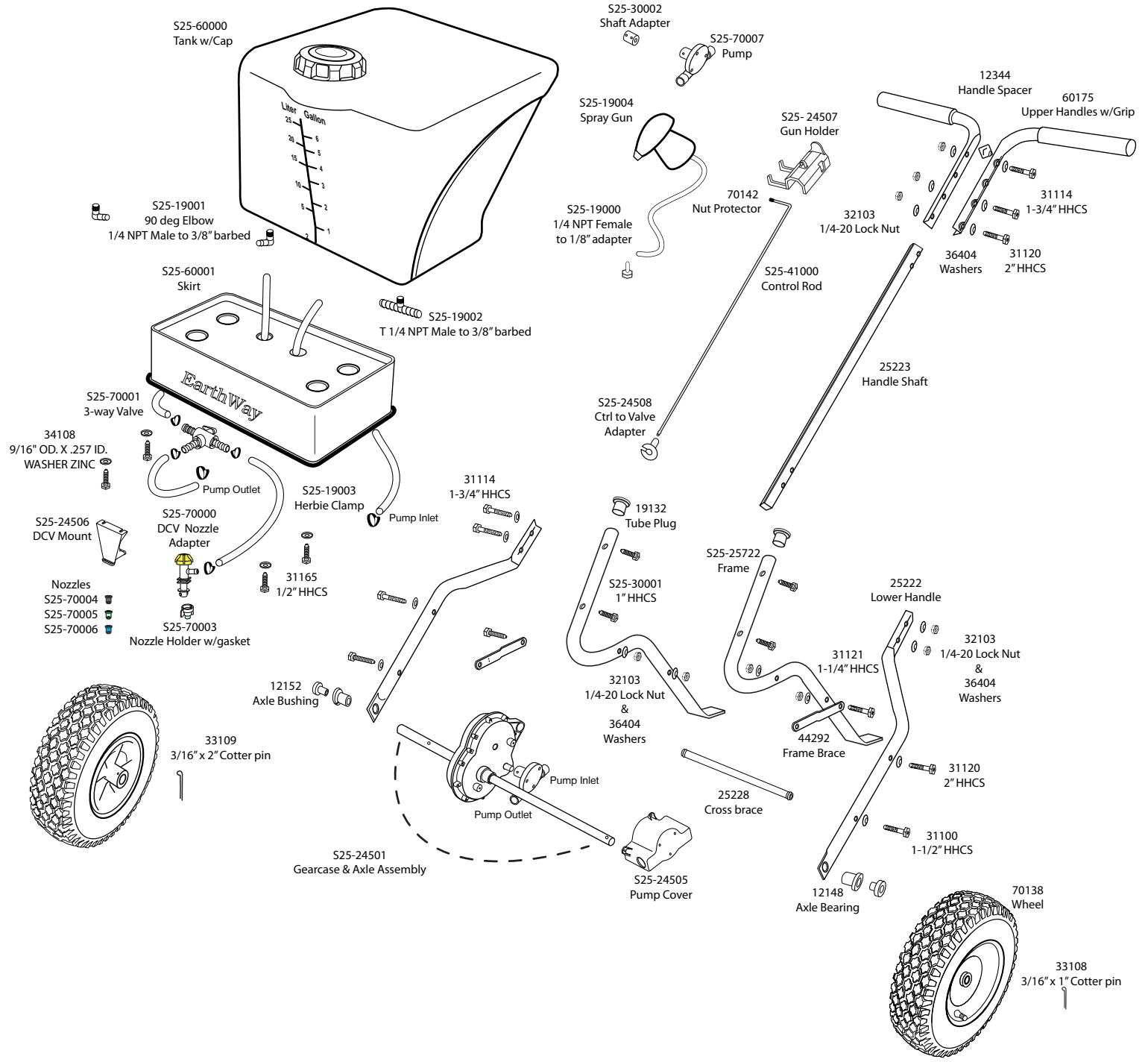
S25 SPRAY-*Pro* Liquid Sprayer ~ Parts List